INCH 88E102-03

ITEM	QTY.		DESCRIPTION	WEIGHT
1	1	88E110	MAIN SHEET	94 Lbs
2	1	88E111	LEFT SIDE	20 Lbs
3	1	88E112	RIGHT SIDE	20 Lbs
4	1	88E113	CENTER	9 Lbs
5	2	88E114	DIVIDER	18 Lbs
6	2	88E115	ANGLE - TOP/BOTTOM	10 Lbs
7	2	88E116	ANGLE - TOP INTERIOR	4 Lbs
8	2	88E117	ANGLE - SIDE INTERIOR	6 Lbs
9	2	80E134	LOAD PAN DOOR CATCH	2 Lbs
10	48	AD97434	NUTSERT 1/4-20	- Lbs
11	2	94733	NUTSERT 10-32	- Lbs
12	1	88E118	MOUNT - DEAD BOLT	1 Lbs

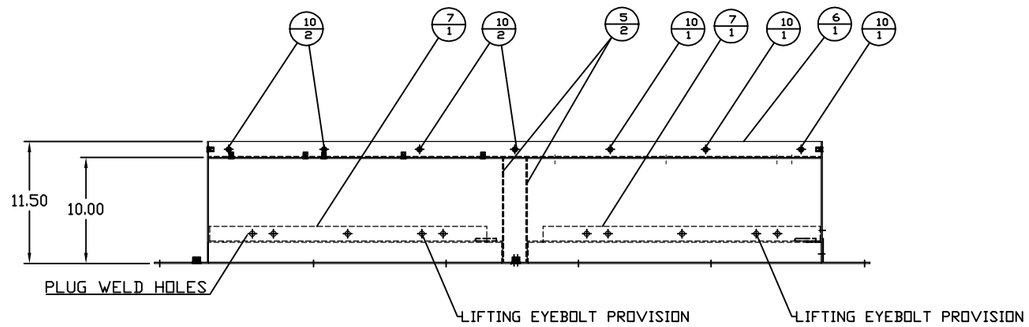

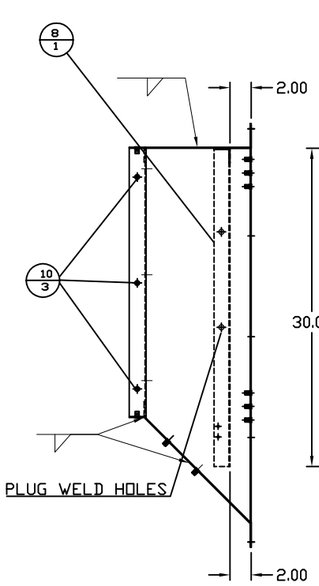

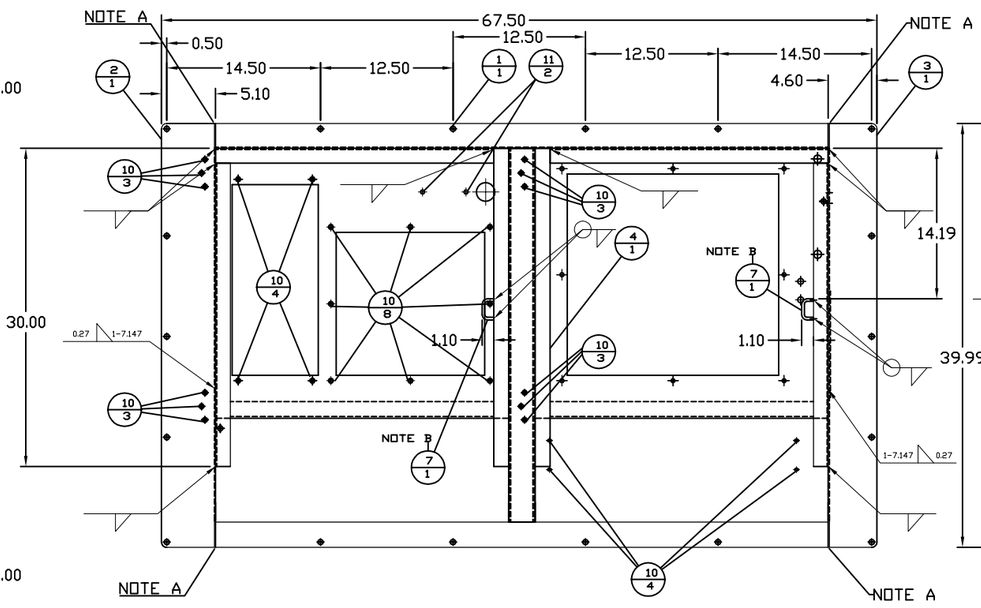

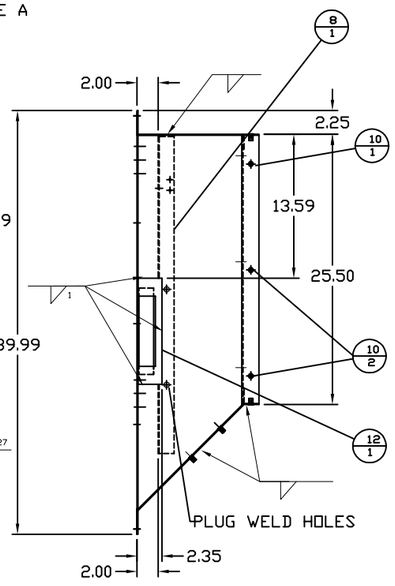

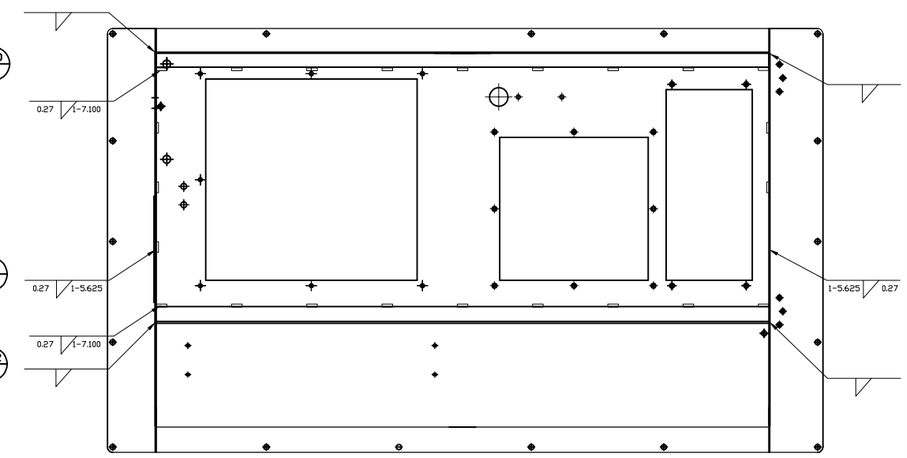

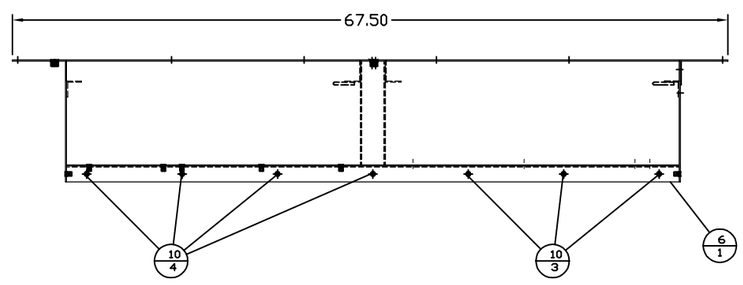

NOTE A: GRIND WELDS FLUSH

NOTE B: LOAD PAN DOOR CATCH (80E134) TO BE WELDED ON THE BACKSIDE OF FRAME ASSEMBLY

NO.	CHANGE NOTICE	BY	DATE
3	ADDED WELD SYMBOLS	BAL	5/10/15
2	CHANGE ITEM 3	DKR	2/4/14
1	MOVE SAFTY SWITCH HOLE	DKR	3/4/13

ALTORFER POWER SYSTEMS
6315 W. FAUBER RD.
BARTONVILLE, IL 61607
PHONE (309) 697-1234
FAX (309) 282-7546

THIS DOCUMENT CONTAINS PROPRIETARY INFORMATION OF ALTORFER, INC. WITHOUT THE WRITTEN PERMISSION OF ALTORFER, INC., ANY COPYING OR OTHER USE EXCEPT THAT FOR WHICH IT WAS INTENDED IS PROHIBITED

ALL DIMENSIONS IN INCHES UNLESS OTHERWISE SPECIFIED	FILE: DF/88E	PROJECT REFERENCE: APS2000	
TOLERANCES: X.X ± 0.100, X.XX ± 0.060, X.XXX ± 0.005, ANGULAR ± 1° — THIRD ANGLE PROJECTION	SCALE/SHEET SIZE: 1=15/B	DRAWN BY: D. RICHARDSON	QUOTE NUMBER: 0
	SHEET: 1 OF 1	DATE: 1/7/13	WORK ORDER NUMBER: 0
TITLE: LOAD PAN AS.			DRAWING NUMBER: 88E102-03