INCH | 47B130

ALL COVER LABELS EXCEPT LA 00066 & LA 00067 ARE ORIENTED TO BE READ FROM THIS SIDE OF THE TANK

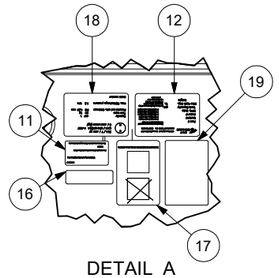

DETAIL A
SCALE 0.08 : 1

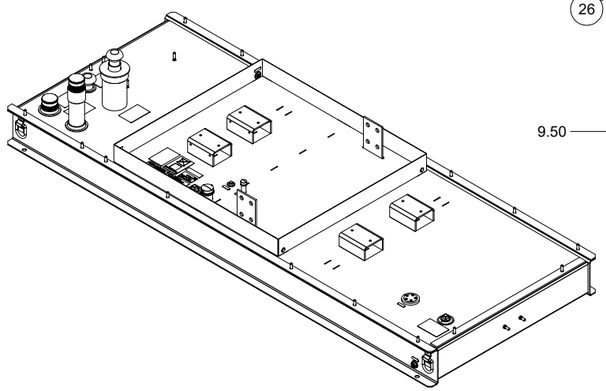

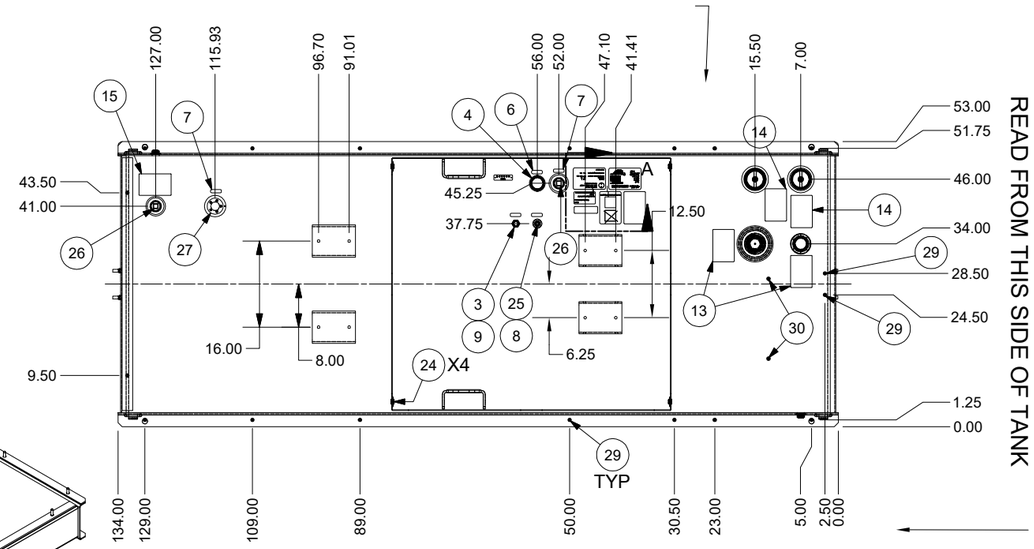

LA 00066 & LA 00067 ORIENTATION TO BE READ FROM THIS SIDE OF TANK

ITEM	QTY	PART NUMBER	DESCRIPTION
1	1	CAT-434-8338-VA	ADAPTER, 5"NPT TO 2" NPT VENT
2	1	CP 13000	3" NPT HALF COUPLING
3	1	CPP 0750	CAP, PLASTIC THREADED 3/4" NPT
4	1	CSP 2000	CAP, STEEL 2" NPT PIPE
5	4	D-RING ASSY	D-RINGBRKT & DRB 12-25 R
6	1	LA 00007	LABEL, FOR DIESEL FUEL ONLY
7	2	LA 00008	LABEL, FUEL LEVEL
8	1	LA 00009	LABEL, FUEL RETURN
9	1	LA 00010	LABEL, FUEL SUPPLY
10	6	LA 00012	LABEL, DRAIN
11	1	LA 00061	LABEL, SEC CONT, ULC
12	1	LA 00065	LABEL, I.D. UL/CUL (4X6)
13	2	LA 00066	LABEL NORMAL VENT, ULC
14	2	LA 00067	LABEL, EMERGENCY VENT, ULC
15	1	LA 00068	LABEL, CONTAINMENT AREA, ULC
16	1	LA 00070	LABEL 3" EMERGENCY VENT , ULC
17	1	LA NO STACK	LABEL, UN31A NO STACKING
18	1	LA UN31A-ID	LABEL, UN31A I.D.
19	1	LA WARNING	LABEL, UL\CUL WARNING
20	2	MV 0200	VENT, MUSHROOM 2" NPT,FEMALE,ZN
21	1	MVA CB2175	ADAPTER, 5"-2" VENT NO SPILL
22	2	NP 2 IN CLOSE	NIPPLE, 2" NPT CLOSE
23	2	PPS 1075AH	PLUG, 3/4" NPT STEEL ALLEN HEAD
24	4	PPS 1500AH	PLUG, 1/2" NPT ALLEN HEAD
25	1	PPT 0500	PLUG, PLASTIC THREADED,1/ 2" NPT
26	2	PPT 1500	PLUG, PLASTIC THREADED, 1.5" NPT
27	1	TPS PLATE	PLATE, SHIPPING
28	2	UL EV 03 GLOBAL	E-VENT, 3" UL CERTIFIED
29	18	WS .375 X 1.25	WELD STUD, 3/8" X 1.25"
30	2	WS .375 X 2.00	WELD STUD, 3/8" X 2.00"

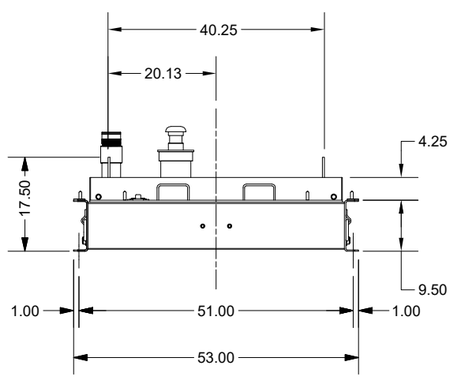

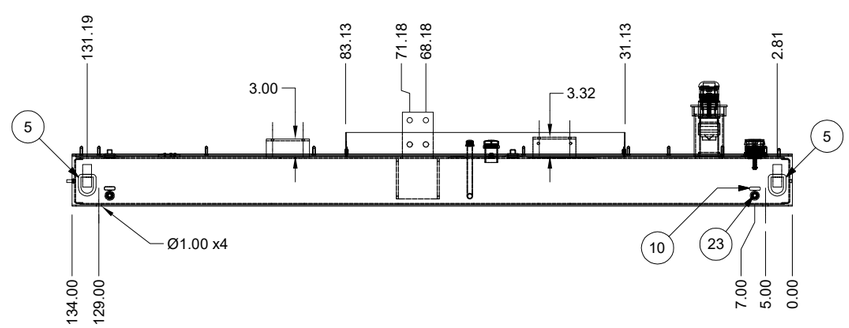

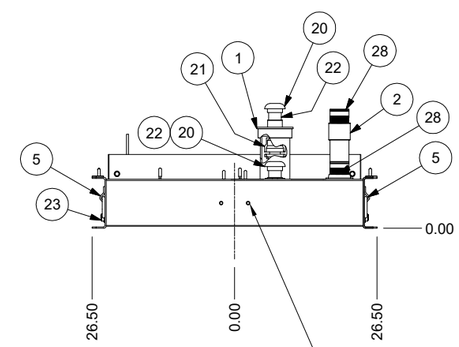

OPTIONAL WELD STUDS FOR PRODUCTION FIXTURING, FULLY WELDED FIXTURING PLATE ALSO AVAILABLE

Notes:
1. Oil fog interior with Protecto Cote 150
2. Pressure test at 3 psi
3. Use diesel fuel resistant sealant on all threads
4. Affix UL 142, ULc-S601, and UN31A labels
5. All fittings to be plugged before paint
6. Powder coat CAT medium gloss black
7. Tank capacities
   Actual: 169 gallons (641 L)
   Usable: 152 gallons (577 L)
8. Tank weight approx. 1525 lbs (692 kg)
9. Tank is min 110% rupture basin containment
10. Tank is UL142, Ulc-S601, and UN31A Complaint

ALTORFER
ALTORFER POWER SYSTEMS
6315 W. FAUBER RD.
BARTONVILLE, IL 61607
PHONE (309) 697-1234
FAX (309) 282-7546

THIS DOCUMENT CONTAINS PROPRIETARY INFORMATION OF ALTORFER, INC. WITHOUT THE WRITTEN PERMISSION OF ALTORFER, INC., ANY COPYING OR OTHER USE EXCEPT THAT FOR WHICH IT WAS INTENDED IS PROHIBITED

ALL DIMENSIONS IN INCHES UNLESS OTHERWISE SPECIFIED	FILE DF47B	PROJECT REFERENCE APS60-100 RENTAL PACKAGE	
TOLERANCES: X.X ± 0.100, X.XX ± 0.060, X.XXX ± 0.005, ANGULAR ± 1°	THIRD ANGLE PROJECTION	SCALE/SHEET SIZE 1=20/C	DRAWN BY K. NUNN	QUOTE NUMBER 0
		SHEET 1 OF 1	DATE 06-24-14	WORK ORDER NUMBER 0
TITLE BASE GROUP - APS60-100				DRAWING NUMBER 47B130

CHANGE NOTICE: NO. | DATE | BY